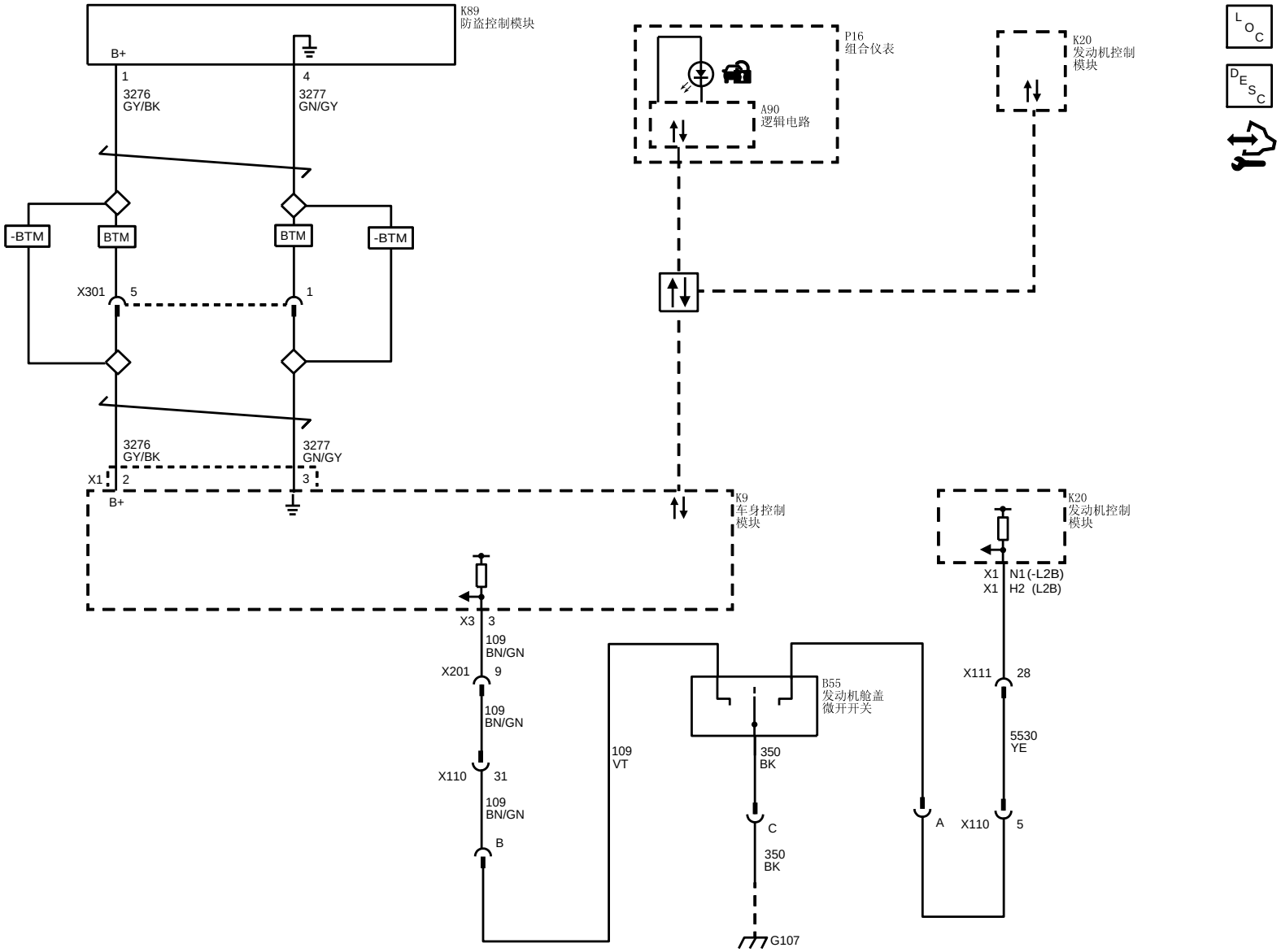


MetaWeb Demo Version